Computer Network Course Design

Lab-5 Basic RIP Configuration and Analysis

CONTENTS

Objectives 2
Required Resources 2
Background 2
Lab-5-1: Basic RIPv1 Configuration 3
Requirements 3
Steps 3
Comments 6

OBJECTIVES

1. Understand static and dynamic routing.
2. Understand RIP and its fundamental operations.
3. Configure and verify RIP routing.

REQUIRED RESOURCES

1. Huawei eNSP.
2. ping.
3. tracert.
4. Wireshark.

BACKGROUND

Routing Information Protocol (RIP) is a standards-based, distance-vector, dynamic routing protocol used by interior routers to exchange routing information. RIP uses hop count to determine the best path between two locations. Hop count is the number of routers the packet must go through till it reaches the destination network. The maximum allowable number of hops a packet can traverse in an IP network implementing RIP is 15 hops, meaning that 16 is deemed unreachable.

RIP works well in small networks, but it's inefficient on large networks with slow WAN links or on networks with a large number of routers installed.

The main problems of RIP are here: slow convergence and routing loops. The RIP standard implements two different technologies to prevent routing loops; split-horizon and poison reverse.

In a RIP network, each router broadcasts its entire RIP table to its neighboring routers every 30 seconds. When a router receives a neighbor's RIP table, it uses the information provided to update its own routing table and then sends the updated table to its neighbors.

Typically, RIP uses UDP as its transport protocol. The well-known UDP port for RIP traffic is 520.

There are two versions of RIP: RIPv2 and RIPv2. RIPv2 has some additional features. The basic features of RIPv1 and RIPv2 are same. The following Table 5-1 lists the basic differences between the RIPv1 and RIPv2 routing protocols.

Table 5-1 The Basic Differences between the RIPv1 and RIPv2

No.	Feature	RIPv1	RIPv2
1	Class-less addressing and Variable-Length Subnet Masks (CIDR and VLSM)	Does not support	Support
2	Authentication	Does not support	Support
3	Discontinuous network	Does not support	Support

LAB-5-1: BASIC RIPV1 CONFIGURATION

Requirements

The network topology is shown in Figure 5-1. Four routers are used to interconnect the networks of different departments on the campus. Please configure RIPv1 on the four routers to implement communication between departments A, B and loopback 0 (where loopback 0 simulates a host on the network of other departments).

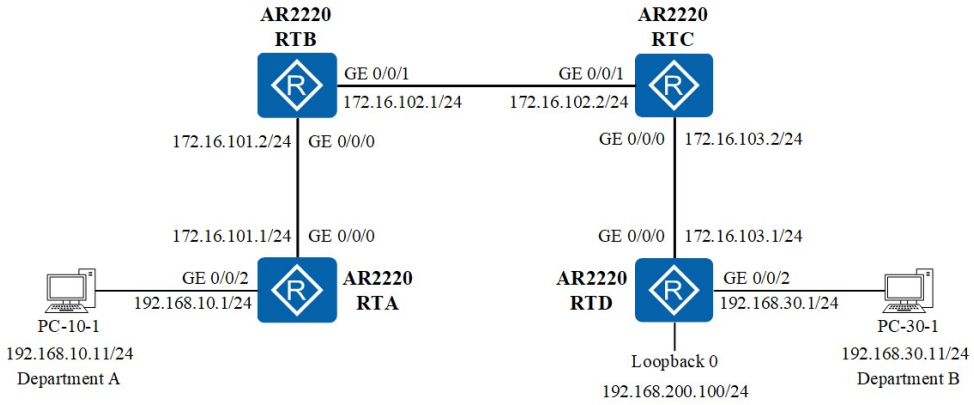

Figure 5-1 A network with RIPv1 configured on the routers

The IPv4 address allocations are shown in Table 5-2.

Table 5-2 IPv4 Addressing Table

	IPv4 Address	Mask	Default Gateway
PC			
PC-10-1	192.168.10.11	255.255.255.0	192.168.10.1
PC-30-1	192.168.30.11	255.255.255.0	192.168.30.1
Router RTA			
GE 0/0/2	192.168.10.1	255.255.255.0	
GE 0/0/0	172.16.101.1	255.255.255.0	
Router RTB			
GE 0/0/0	172.16.101.2	255.255.255.0	
GE 0/0/1	172.16.102.1	255.255.255.0	
Router RTC			
GE 0/0/1	172.16.102.2	255.255.255.0	
GE 0/0/0	172.16.103.2	255.255.255.0	
Router RTD			
GE 0/0/0	172.16.103.1	255.255.255.0	
GE 0/0/2	192.168.30.1	255.255.255.0	
Loopback 0	192.168.200.100	255.255.255.0	

Steps

Step 1: Load the topology.

1. Start eNSP and click the "Open" icon in the toolbar, and load the topology file **lab-4-1 RT.StaticDefaultRoute.topo** saved in the Lab-4-1.
2. Check and make sure the settings of the IP address, subnet mask and default gateway of each PC match the address allocation.
3. Click the "Save As" icon in the toolbar to save the topology as **lab-5-1 RT.RIPv1.topo**.

Step 2: Start devices.

Click the " Start Device" icon in the toolbar to start all devices.

Step 3: Assign IP addresses to interfaces on the routers.

Assign and check IP addresses to interfaces on each router following the instructions in Step 4 in the Lab-4-1.

Step 4: Configure the default routes and basic RIPv1 on the routers.

1. Configure a default route on RTA

Double-click the icon of router RTA in the work area to open its configuration window.

```
<RTA> system-view
# configure a static default route using the IP address of the interface GE 0/0/0 on its neighbor RTB as the next-hop address.
[RTA]  ip route-static 0.0.0.0 0.0.0.0 172.16.101.2
# display IP routing table.
[RTA] display IP routing-table
```

2. Configure the basic RIPv1 on RTB

```
<RTB> system-view
# enable rip. RIP process is created. The value of process id of RIP is an integer that ranges from 1 to 65535. The default value is 1.
[RTB] rip 1
# enabling RIP on the specified network segment. The specified address must be the address of the natural network segment.
[RTB-rip-1] network 172.16.0.0
[RTB-rip-1] quit
# display IP routing table.
[RTB] display IP routing-table
# display all RIP routes in IP routing table.
[RTB] display IP routing-table protocol rip
```

3. Configure the basic RIPv1 on RTC

```
<RTC> system-view
[RTC] rip 1
# enabling RIP on all network segments.
[RTC-rip-1] network 172.16.0.0
[RTC-rip-1] quit
[RTC] display IP routing-table
[RTC] display IP routing-table protocol rip
```

4. Configure the basic RIPv1 on RTD

```
<RTD> system-view
[RTD] rip 1
[RTD-rip-1] network 172.16.0.0
[RTD-rip-1] network 192.168.30.0
[RTD-rip-1] network 192.168.200.0
# you can try to enable RIP on all network segments using the command “network 0.0.0.0”.
[RTD-rip-1] quit
[RTD] display IP routing-table
[RTD] display IP routing-table protocol rip
```

Step 5: Examine and verify RIPv1 configurations.

1. Examine the RIPv1 configurations on RTB. You can use the same commands to examine the RIPv1 configurations on RTC and RTD.

Double-click the icon of router RTB in the work area to open its configuration window.

```
# check the status and configuration of a RIP process.
<RTB> display rip
<RTB> display rip 1
# displays the configuration and operation status of RIP on interfaces.
<RTB> display rip 1 interface gigabitethernet 0/0/0
# check information about RIP neighbors.
<RTB> display rip 1 neighbor
# check all the active routes in the RIP database. These routes are sent in RIP Update packets.
<RTB> display rip 1 database
# displays all RIP routes learned from other routers and view the values of different timers related to each route.
<RTB> display rip 1 route
# displays statistics on a RIP interface.
<RTB> display rip 1 statistics interface all
```

```
<RTB> display rip 1 statistics interface gigabitethernet 0/0/0
# display IP routing table.
<RTB> display IP routing-table
# display all RIP routes in IP routing table.
<RTB> display IP routing-table protocol rip
```

2. Verify RIPv1 routing.

(1) Test connectivity between devices.
Ping PC-30-1 from PC-10-1 command window and visa versa.
Ping PC-10-1 from loopback 0 on router RTD configuration window and visa versa.

(2) Trace the route from PC-10-1 to PC-30-1. Issue the following command in PC-10-1's command window:

```
tracert 192.168.30.11
```

Answer the following questions:

Q5-1.1. Paste the screenshot of the created topology.

Q5-1.2. Paste the screenshot of the IP routing table on the router RTA. Highlight the RIPv1 routes in the screenshot. Which routes are learned from the RIP neighbors?

Q5-1.3. Paste the screenshot of the IP routing table on the router RTB. Highlight the RIPv1 routes in the screenshot. Which routes are learned from the RIP neighbors?

Q5-1.4. Paste the screenshot of the IP routing table on the router RTC. Highlight the RIPv1 routes in the screenshot. Which routes are learned from the RIP neighbors?

Q5-1.5. Paste the screenshot of the IP routing table on the router RTD. Highlight the RIPv1 routes in the screenshot. Which routes are learned from the RIP neighbors?

Q5-1.6. Can PC-10-1 and PC-30-1 ping each other? Please paste the screenshot of the ping result.

Q5-1.7. Can PC-10-1 and loopback 0 on RTD ping each other? Please paste the screenshot of the ping result.

Q5-1.8. Please paste the screenshot of the result of command "tracert 192.168.30.11" issued from PC-10-1.

Step 6: Analyze RIPv1 traffic.

Start data capture on interface GE 0/0/0 and GE 0/0/1 on router RTC, then analyze the captured RIPv1 communications.

Answer the following questions:

Q5-1.9. How many types of RIPv1 packets are there? What are they?

Q5-1.10. What is the interval between RIPv1 routing updates?

Q5-1.11. Which protocol does RIPv1 use to transmit RIP packets? What are the source port number and destination port number?

Q5-1.12. When RIPv1 sends a routing update message, what is the destination IP address of the message? What type of IP address is it?

Q5-1.13. How many routes are there in each RIPv1 route update message? What information does each route contain in the route update message? Please paste the screenshot of the route information contained in the captured update routing message.

Q5-1.14. Please give the format of RIPv1 routing update message.

COMMENTS

Your comments and/or suggestions on this lab: